RoHS COMPLIANT

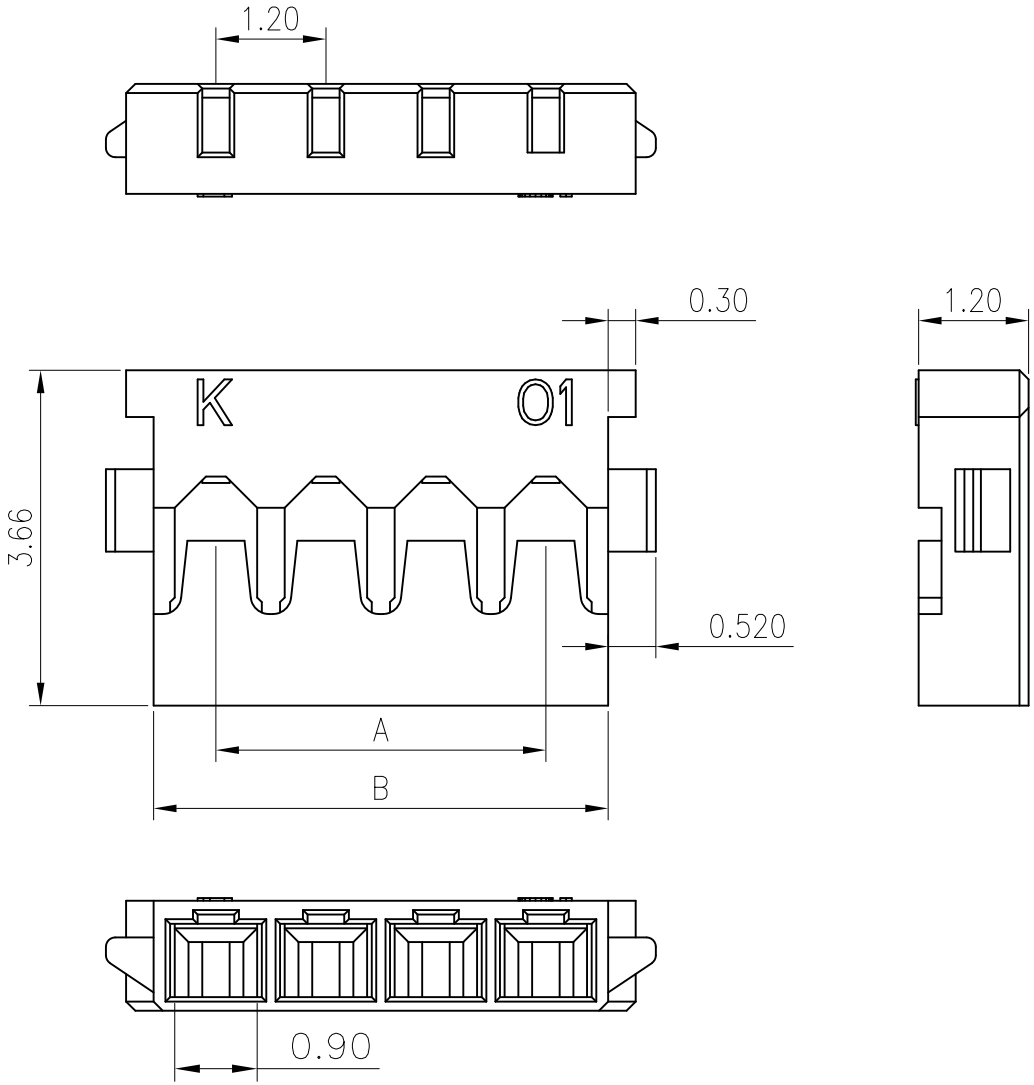

◆SPECIFICATIONS
- Current rating: 1.5A AC, DC
- Voltage rating: 50V AC,DC
- Temperature range: -40°C ~ +105°C
- Insulation resistance: 100MΩ Min.
- Withstanding voltage: 500V AC/ minute.
- Contact resistance: 20mΩ Max.

A3 Material: LCP UL94V-0 Black
Suitable: 1200 series Crimp Terminal

Ordering Code:

H120001**140*A

102=2P
103=3P
.....

14:LCP black A3

00:Halogen free
01:Conventional products

PIN.	Dimension	
	A	B
2P	1.20	2.60
3P	2.40	3.80
4P	3.60	5.00
5P	4.80	6.20
6P	6.00	7.40
7P	7.20	8.60

MARK	REVISION DESCRIPTION	SIGNATURE	DATE
A4	Uniformly arrange the drawings	Shen	2021.08.30
A3	Cancel the PA46	ZZN	2021.05.06

TOLERANCE
X.X ±0.30
X.XX ±0.20
X.XXX ±0.10
Angle ±2°

TITLE: MX1.2 Housing

UNIT:mm | SCALE:1/1

DRAWN: Shen 2021.08.30
CHECKED:
APPROVED:
SHEET:1/1 | PROJECTION

KONNRA 东莞市康瑞电子有限公司
DongGuan Konnra Electronics Co.,Ltd.

PART NO.:H120001****0*A

REV.:A4 | DRAWING NO.:1200H01-A-S